User's Guide:
C51 Microcontroller Project Launcher Circuit Module

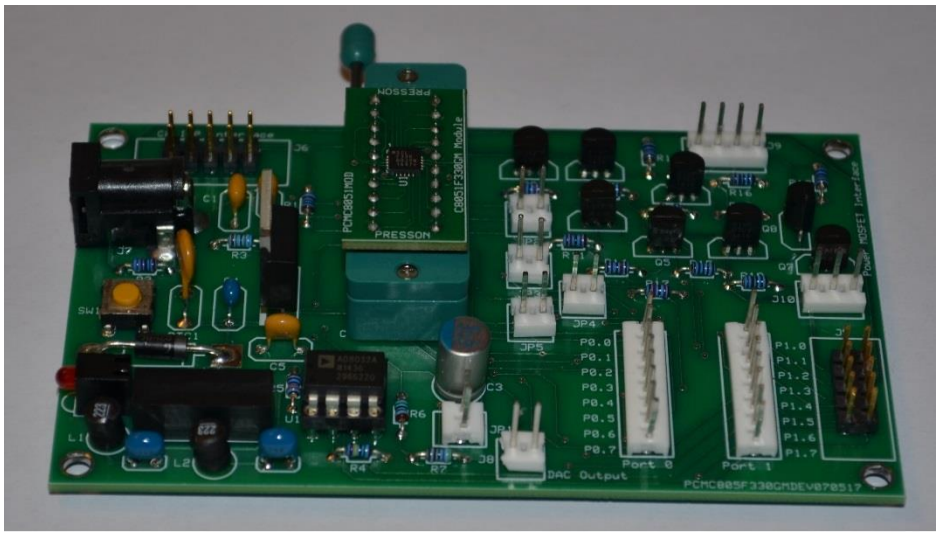

Introduction:

The purpose of the PRESSON C51 Microcontroller Project Launcher Circuit Module is to provide a platform for experimentation and project development using the Silicon Labs C8051F330-GM **MCU** (microprocessor control unit). In the datasheet for the C8051F330-GM MCU, the manufacturer describes the device as a "system on a chip MCU." This description is appropriate because of the rich assortment of peripherals that are present within the **IC** (integrated circuit) package, operating in support of the embedded 8051 **CPU** (central processing unit). These peripherals include numerous programmable timers and counters, a 10-bit **ADC** (analog-to-digital converter), a current-sourcing **DAC** (digital to analog converter), a **UART** (universal asynchronous receiver/transmitter), an enhanced **SPI**™ (serial peripheral interface) port, and a **SMB**™ (system management bus) port.

PRESSON Circuit Modules, Inc. provides a comprehensive set of lab/theory exercises covering real world applications of the peripherals contained within the C8051F330-GM MCU. A feature of the C51 Microcontroller Project Launcher that makes it particularly desirable for experimentation and project development is the removable C8051330GM DIP-20 MCU Module. During programming and experimentation, the module fits securely into either a standard DIP-20 IC socket or an optional DIP-20 ZIF socket, located near the center of the project launcher module. When initial programming and experimentation is completed, the user can quickly remove the module and place it into any standard breadboard or protoboard with a 0.1" grid. If a project requires further programming revisions or debugging, the user can easily remove the module from the project board and re-insert into the IC socket.

Printed Circuit Board Specifications:

The C51 Microcontroller Project Launcher is contained on a two-layer FR-4 epoxy glass **PCB** (printed circuit board) with 1/2 oz copper laminate. The board dimensions are 4.0" x 2.5." Both sides of the PCB are coated with solder mask to prevent damage by oxidation and limit the occurrence of solder bridges during assembly. Both sides of the PCB are coated with solder mask to prevent damage by oxidation and limit the occurrence of solder bridges during assembly. The lower layer of the PCB contains a ground plane, with thermal pads for connection of components to the common 0VDC reference. Four pads with a 0.125" inner diameter, located at the four corners of the PCB, serve as mounting holes. These pads connect directly to the PCB ground plane, allowing the board to be mounted on a metal panel and have a common connection to a chassis ground. (Aluminum standoffs and mounting hardware are included with the C51 Project Launcher Ancillary Kit.)

Figure 1 contains a silk screen view of the upper layer of the PCB, clearly indicating the location of each component. The locations of Display1 and Display2 are shown on the silk screen side of the board. However, these components are mounted on the opposite, ground plane side of the PCB.

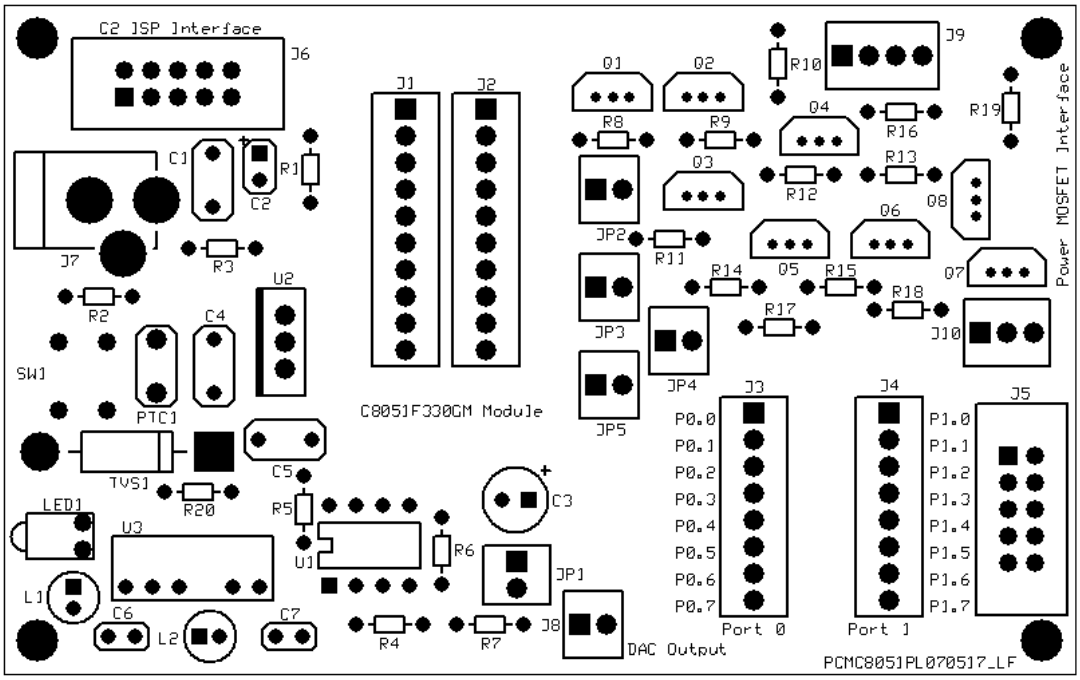

Figure 1

Figure 2 uses colors to represent the two layers of the C51 Microcontroller Project Launcher. Here, the ground plane and traces on the lower layer of the circuit board are represented in green, while traces, pads, and vias on the upper layer of the board are shown in red. Locations of components on the upper layer of the PCB are shown in yellow.

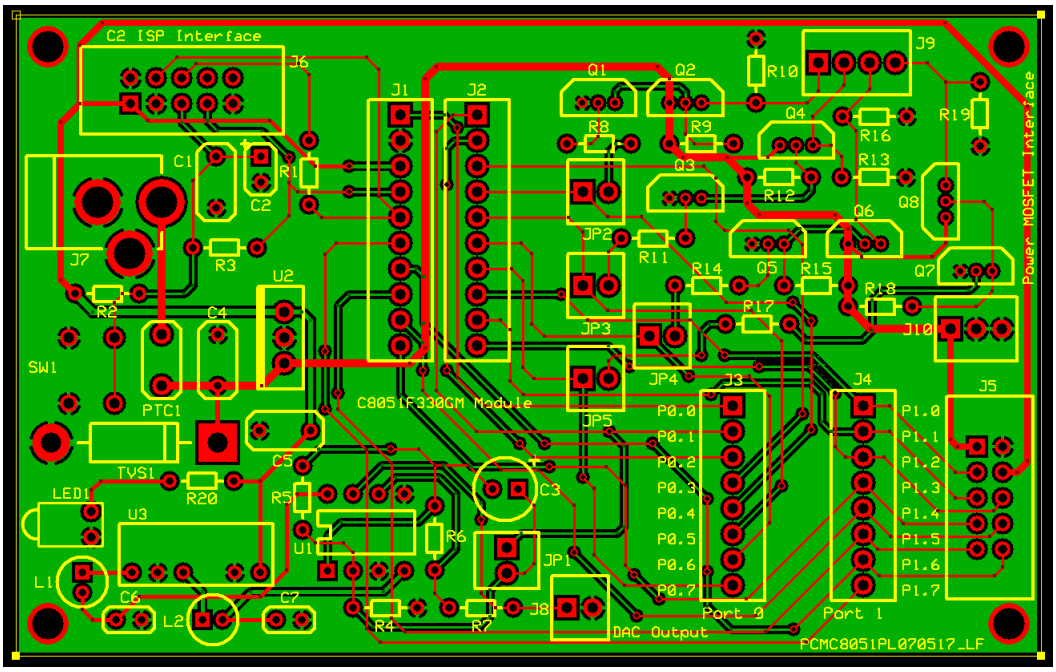

Figure 2

Table 1 identifies and defines several of the reference designators used for components contained on PRESSON Circuit Modules products.

Table 1

Common Component Designators	
Designation	**Description**
J (J1, J2, J3...)	Input/Output Connector
TP (Tp1, TP2, TP3...)	Test Point
JP (JP1, JP2, JP3...)	Jumper Position
R (R1, R2, R3...)	Resistor
C (C1, C2, C3...)	Capacitor
L (L1, L2, L3...)	Inductor
U (U1, U2, U3...)	**I**ntegrated **C**ircuit (**IC**)
Q (Q1, Q2, Q3...)	Transistor
LED (LED1, LED2...)	**L**ight **E**mitting **D**iode
PTC (PTC1, PTC2...)	Resettable Fuse
RT (RT1, RT2, RT3)	Thermistor
K (K1, K2, K3...)	PCB Relay
SW (SW1, SW2...)	Switch

C51 Microcontroller Project Launcher Circuit Module DC Voltage Distribution:

Figure 3 shows the DC voltage distribution for the C51 Microcontroller Project Launcher. The source voltage to the module **(+VBB**) can range from +9.0VDC to +18.0VDC, with the recommended value of +12.0VDC. The recommended +VBB connection point is DC power jack J7, using a regulated +12VDC Wall Adapter such as Mouser part number 709-GST25U12-P1JW as the power source. The wall adapter must have a 2.1mm/5.5mm center-positive output plug to be compatible with connector J7. The advantage of using J7 as the +VBB connection point is that input current must pass through resettable fuse PT1. If input current exceeds the 500mA holding level of PTC1, the fuse switches into its high ohmic condition, blocking the flow of current to the board's **Power_In** bus. (Once PTC1 enters a high-ohmic state, power must be removed from the board and the overcurrent condition must be remedied prior to reapplication of +VBB.) Note that, in Figure 3, pad locations along the Power_In bus are highlighted in blue.

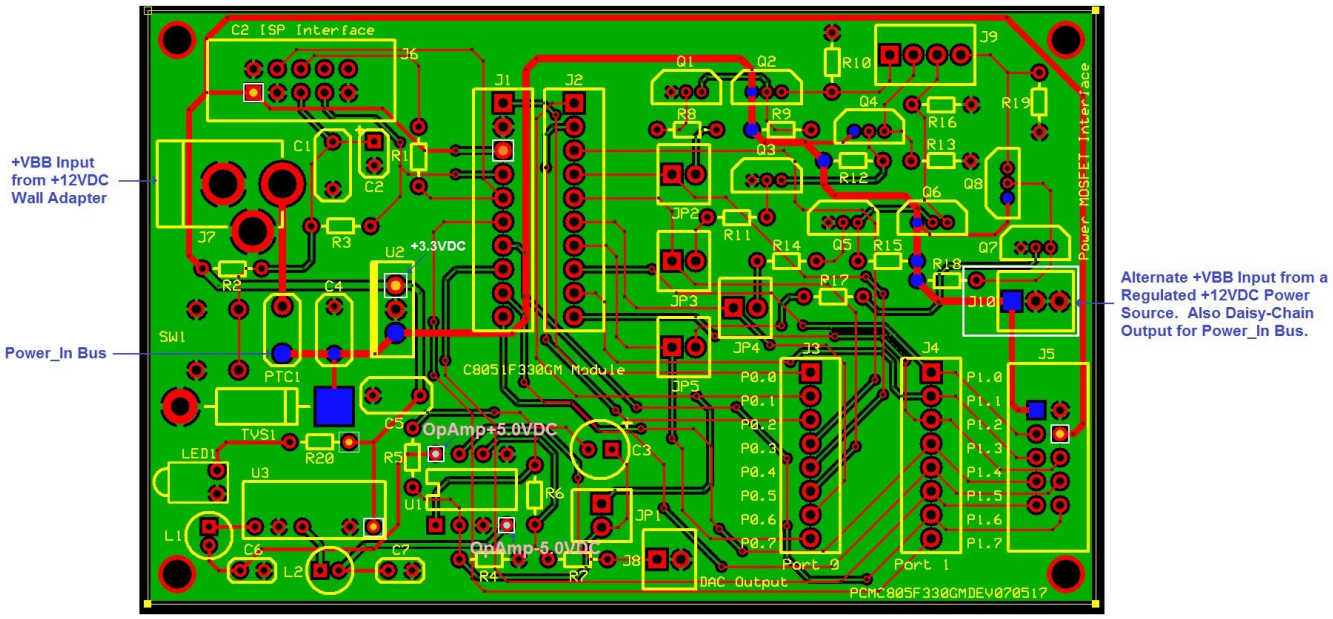

C8051F330GM Development Board DC Voltage Distribution

Figure 3

An alternate connection point for +VBB is pin strip header J10 (highlighted by a white rectangle at the RH side of Figure 3). Connecting +VBB to pin 1 of J10 (with ground at either pin 2 or pin 3) brings the source voltage directly to the Power_In bus. It should be noted that, with this power connection, PTC1 is essentially removed from the circuit and unable to serve as a current limiter. If, however, J7 becomes the +12.0VDC input, then J10 can serve as a daisy chaining output, providing +12.0VDC to other circuit modules or breadboarded circuitry

As seen in Figure 3 and the schematic section in Figure 4, transient voltage suppressor **TVS1** performs a voltage limiting action, clipping any transient voltage spikes present on the Power_In bus that begin to exceed its 28V **VRM** (maximum reverse voltage). **MLCC** (multilayer ceramic capacitor) C4 performs an additional filtering action, reducing high frequency noise that could be present on the Power_In bus. Capacitor C5 provides noise reduction and stabilization for the +3.3VDC bus.

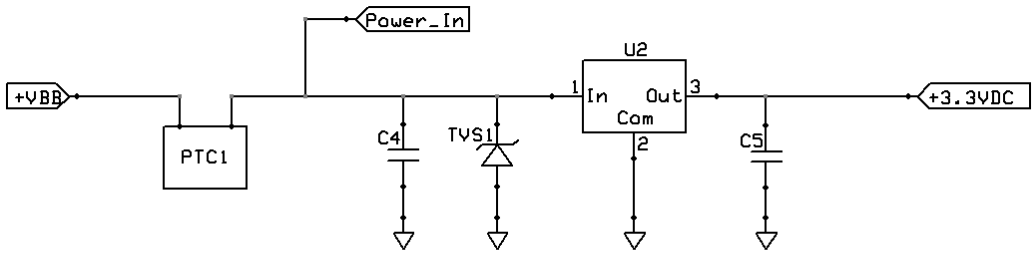

Current Limit And Voltage Regulation

Figure 4

As indicated in Figures 3 and 4, pin 3 of voltage regulator U2 serves as the source of the +3.3VDC bus for the C51 Microcontroller Project Launcher. Upon application of power, LED1 should illuminate, indicating the presence of +3.3VDC at the output of U2. Note that, in Figure 3, significant pad locations on the +3.3VDC bus are indicated with white rectangles and highlighted in orange. Pin 1 of JTAG header J6 could provide power to a Debug Adapter requiring a +3.3VDC power source. (The Debug Adapter is used during in-system programming (**ISP**) of the C51 Microcontroller Project Launcher.) The +3.3V at pad location 3 of J1 provides power to the C8051330GM DIP-20 MCU Module.

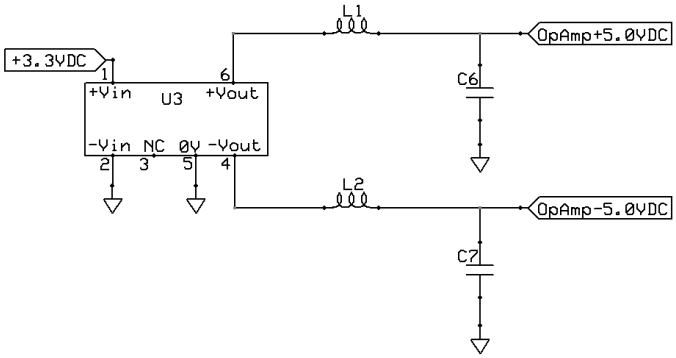

DAC OP AMP Rails: DC/DC Conversion

Figure 5

As shown in Figures 3 and 5, +3.3V is bussed to pin 1 of DC/DC power converter U3. This device, in turn, provides rail voltages +/-5.0VDC to the op amp current-to-voltage conversion circuitry of the C51 Microcontroller Project Launcher. As indicated in Figure 3, the Power_In bus voltage and +3.3VDC present at pins 1 and 4 of connector J5 allow daisy chaining of DC power to the PRESSON Microcontroller Display Circuit Module. This module interfaces with the C51 Microcontroller Project Launcher via a 10-position ribbon cable (contained in the C51 Microcontroller Project Launcher Ancillary Kit).

C8051330GM DIP-20 MCU Module Socket and I/O Port Breakout Connections:

Figure 6 shows the designations for the pad locations of J1 and J2. These designations correspond to the pin locations of the C8051330GM DIP-20 MCU Module, which fits into either a standard DIP-20 IC socket or a ZIF socket during in-system programming. Either ZIF1 (recommended for production programming), or the standard IC socket is soldered into the pad locations of J1 and J2. Figure 7 shows the silkscreen layer of the C8051330GM DIP-20 MCU Module.

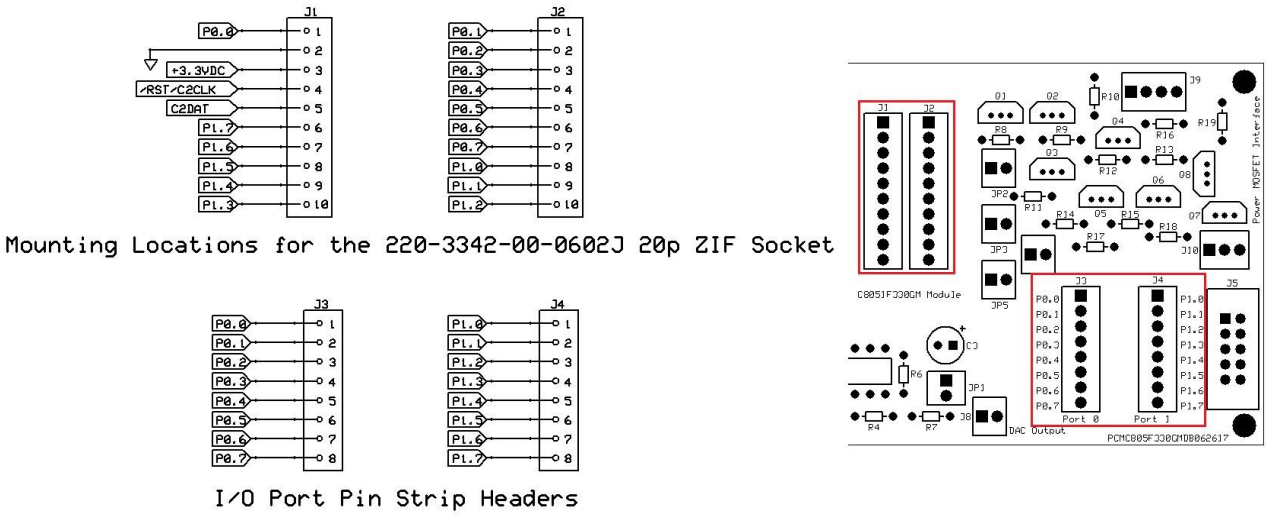

Figure 6

The two eight-position pin strip headers, J3 and J4, serve as breakout locations for the two 8-bit MCU ports, Port 0 and Port 1. The bitwise notation used in programming the ports of the C8051F330-GM is as follows: Bit 0 of Port 0 is designated as P0.0. Bit 3 of Port 1 is designated as P1.3. (Note that, because the least significant bit position of a port is designated as 0, P1.3 is the fourth bit position of Port 1.) It is common to refer to port bit 0 as the **LSB** (least significant bit) and bit 7 of an eight-bit pot as the **MSB** (most significant bit).

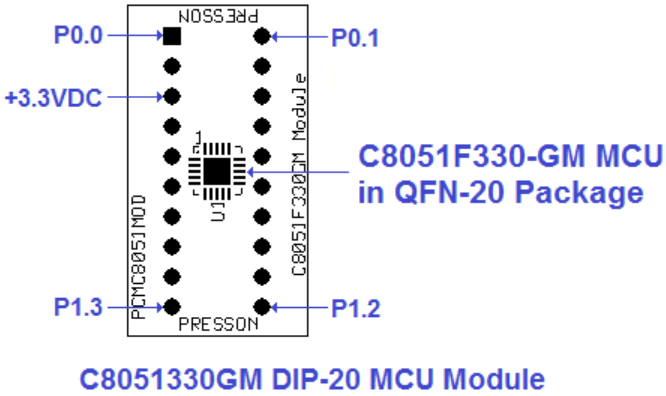

Figure 7

The relationship of the C8051330GM DIP-20 MCU Module and breakout headers J3 and J4 might best be illustrated with an example. Assume, as shown in Figure 8, the C8051330GM DIP-20 MCU Module has been inserted into the ZIF socket and is running a program that produces a logic high at port bit P1.2. This positive transition also occurs at pin 3 of pin strip header J4, the breakout location for P1.2. Also assume a jumper wire is connected between pin 3 of J4 and the base resistor of a common emitter transistor switch fabricated on the user's breadboard. The +3.0V logic high at P1.2 turns on transistor Q1 and illuminates LED1.

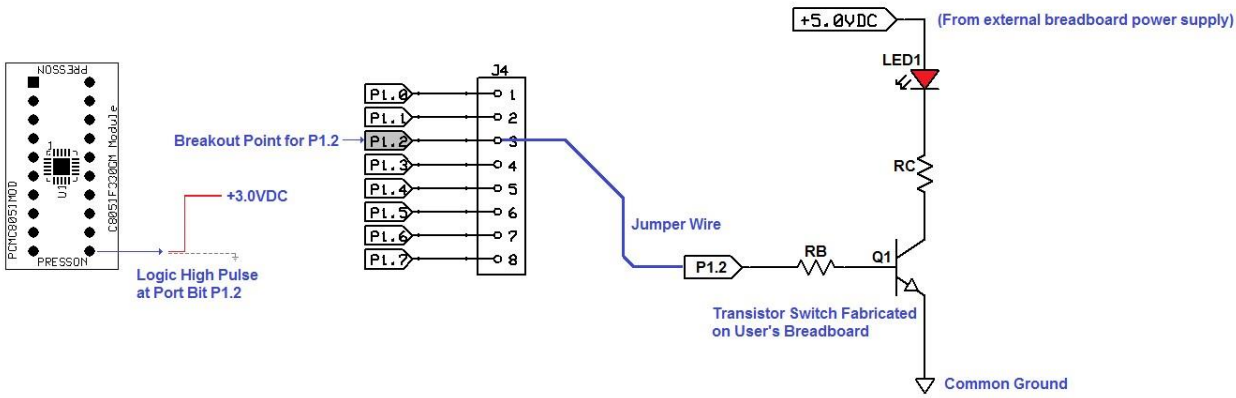

Figure 8

As seen in Figures 6 and 8, the presence of the J3 and J4 breakout headers on the C51 Microcontroller Project Launcher allows for easy access to the sixteen individual bit locations of Port 0 and Port 1 of the C8051F330-GM MCU. The C51 Microcontroller Project Launcher is designed specifically for training in industrial applications of an 8-bit MCU. In the field of industrial mechatronics, bitwise output programming

is an essential element in controlling motors and other forms of electromechanical actuator. For this reason, a Quad MOSFET Transistor Switching system has been designed into the C51 Microcontroller Project Launcher. Figure 9 contains a schematic diagram of this switching circuitry.

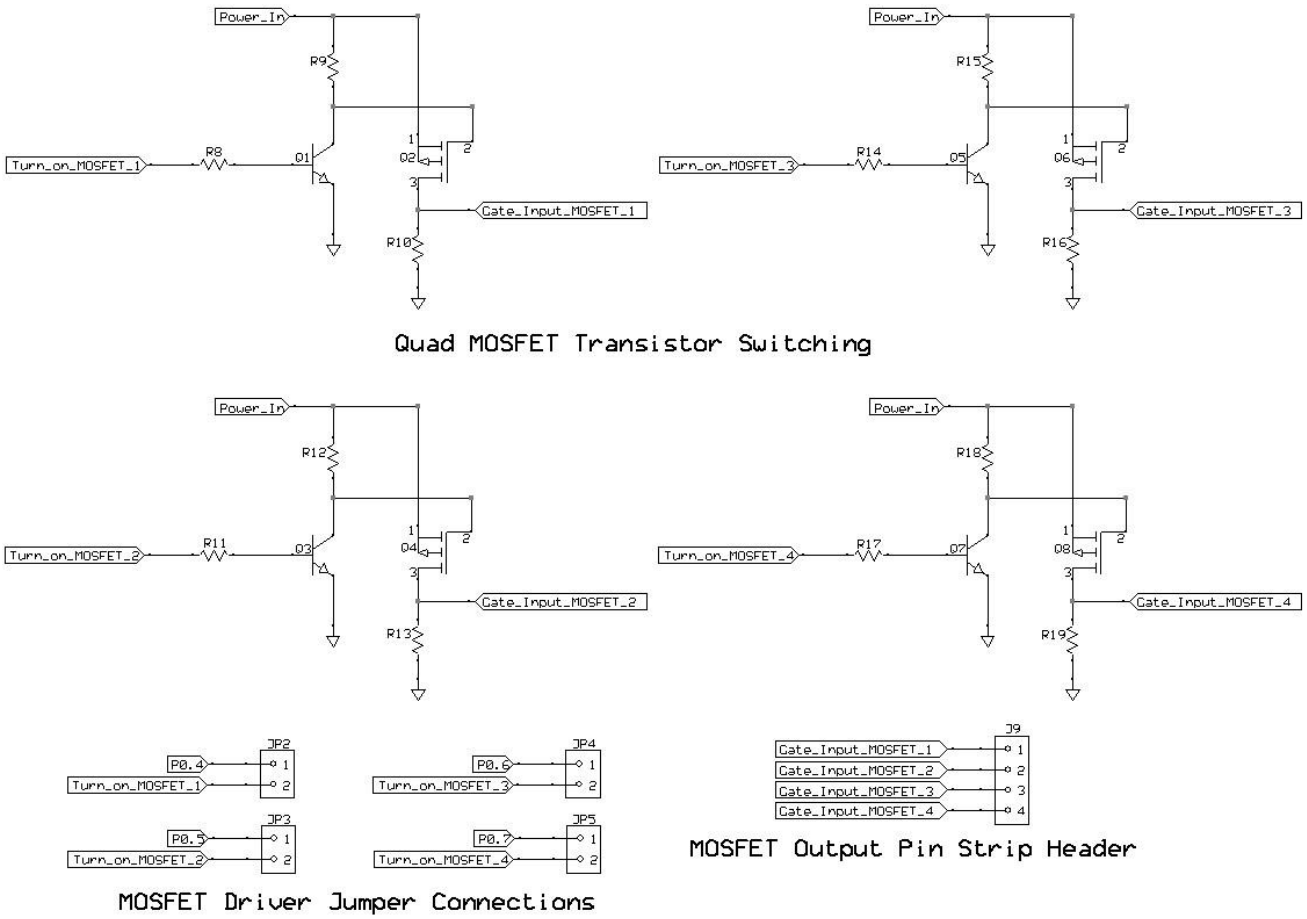

Figure 9

C51 Microcontroller Project Launcher design allows port bits P0.4, P0.5, P0.6, and P0.7, continuously present at pins 5, 6, 7, and 8 of header J3, to become the four transistor switching channels. This switching circuitry is designed to provide a safe interface between the C8051330GM DIP-20 MCU Module and external n-channel power MOSFET transistors. Such power MOSFETs are widely used to commutate higher power loads such as motors and solenoids. Jumper positions JP2, JP3, JP4, and JP5 allow access to these four transistor output channels. Each jumper position contains a two-position pin header. Placing a shorting jumper over one of these headers enables its associated port bit to become the control input to a two-stage level shifting transistor switch.

For example, placing a shorting jumper over JP2 allows P0.4 to function as the **Turn_on_MOSFET_1** signal. A logic high at P0.4 turns on transistor Q1. With Q1 in a saturation state, the voltage at the gate of p-channel MOSFET Q2 is nearly 0V. This low gate voltage switches Q2 into full conduction, pulling the **Gate_Input_MOSFET_1** voltage (at pin 1 of header J9) toward the level of Power_In. This signal could be sent to the gate of an external n-channel power MOSFET which could function as a current sinking switch for a high power electromechanical load. As shown in Figures 9 and 10, four position pin header J9 serves as the interface point for connection to four external power MOSFETs.

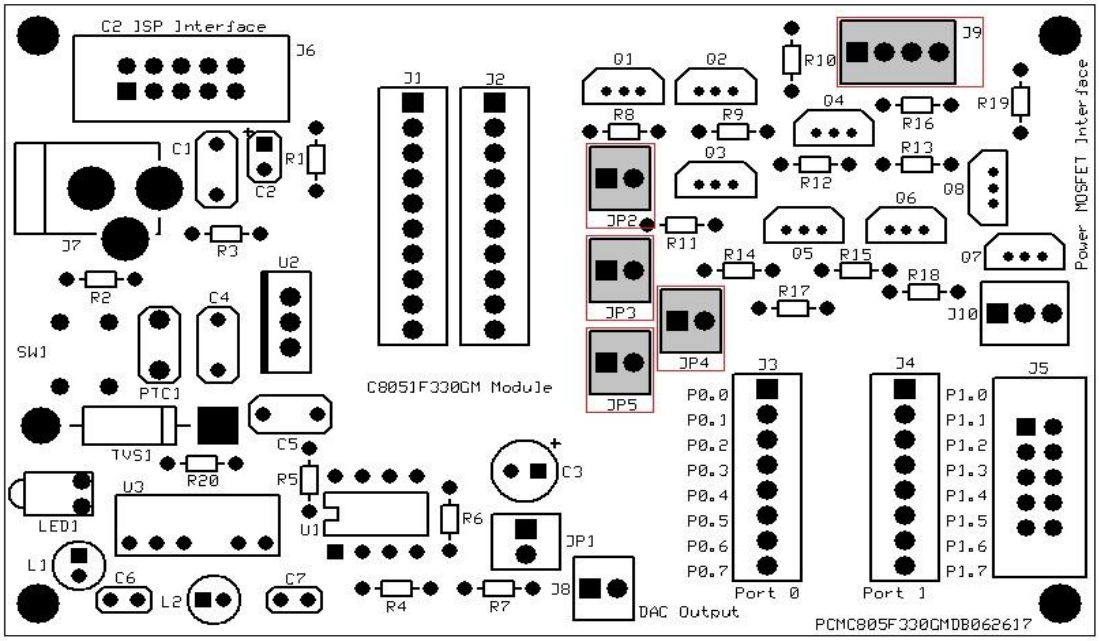

Figure 10

The relationship of the C8051330GM DIP-20 MCU Module, transistor switching channels, and external power circuitry might best be illustrated with an example. Assume a shorting jumper has been placed over the JP2 header, as indicated in Figure 11. This allows P0.4 to become the controlling input for the Gate_Input_MOSFET_1 output channel. If the program currently running on the C8051330GM DIP-20 MCU Module brings P0.4 to a logic high, then the nearly +3.0V level of the Turn_on_MOSFET_1 signal brings the Gate_Input_MOSFET_1 output to nearly the level of Power_In. Assuming Power_In is +12.0VDC, this voltage level at pin 1 of J9 is sufficient to drive the external MOSFET into full conduction. With the external MOSFET functioning as a closed switch, nearly +12.0V develops between the positive and negative terminals of the DC motor. It should be noted that a power MOSFET such as the Nexperia PSMN4R330PL can sink nearly 100 amperes of current when in full conduction! Also, this MOSFET is capable of very fast commutation. The C8051330GM DIP-20 MCU Module could be programmed to provide a pulse width modulated signal at its P0.4 output, allowing the MCU to precisely control motor speed.

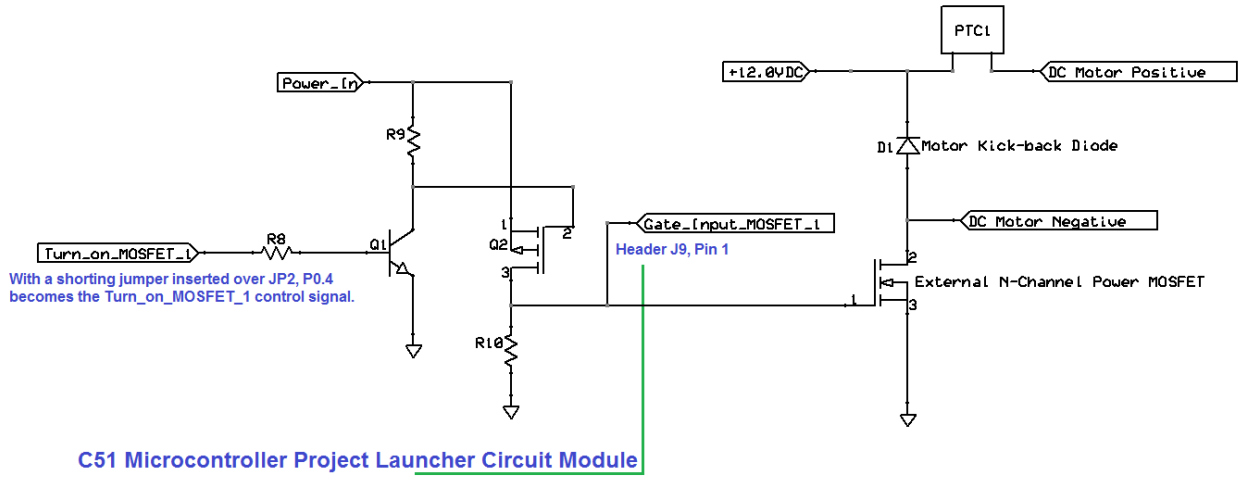

Figure 11

DAC Signal Conditioning:

The C8051F330-GM MCU contains a current mode digital-to-analog converter (**IDAC**), which is accessible at the P0.1 output (pin 20 of the C8051330GM DIP-20 MCU Module). When configured to operate as the IDAC output, P0.1 converts changes in a 10-bit binary control number (placed in the IDAC high and low input registers of the microcontroller during programming) to proportional changes in output current at P0.1. With a 10-bit binary input, the IDAC can produce up to 1024 gradations of output current.

As shown in Figure 12, the C51 Microcontroller Project Launcher contains dual op amp signal conditioning circuitry that converts changes in current at P0.1 to proportional changes in output voltage. Assuming P0.1 has already been configured to function as the IDAC output, the current-to-voltage conversion circuitry is accessed by inserting a shorting jumper over header JP1. This allows the IDAC output to function as the current source for the integrator formed by the first op amp stage. An increase in IDAC current causes an increase in negative potential at the Current_to_/Voltage point. The second op amp stage functions as a simple inverting amplifier, allowing the +Analog_Output signal to develop between 0V and nearly +5.0VDC as the IDAC output current varies between 0 amps and a maximum value specified through microcontroller programming. As shown in Figure 12, the +Analog_Output signal is taken at output header J8 on the C51 Microcontroller Project Launcher.

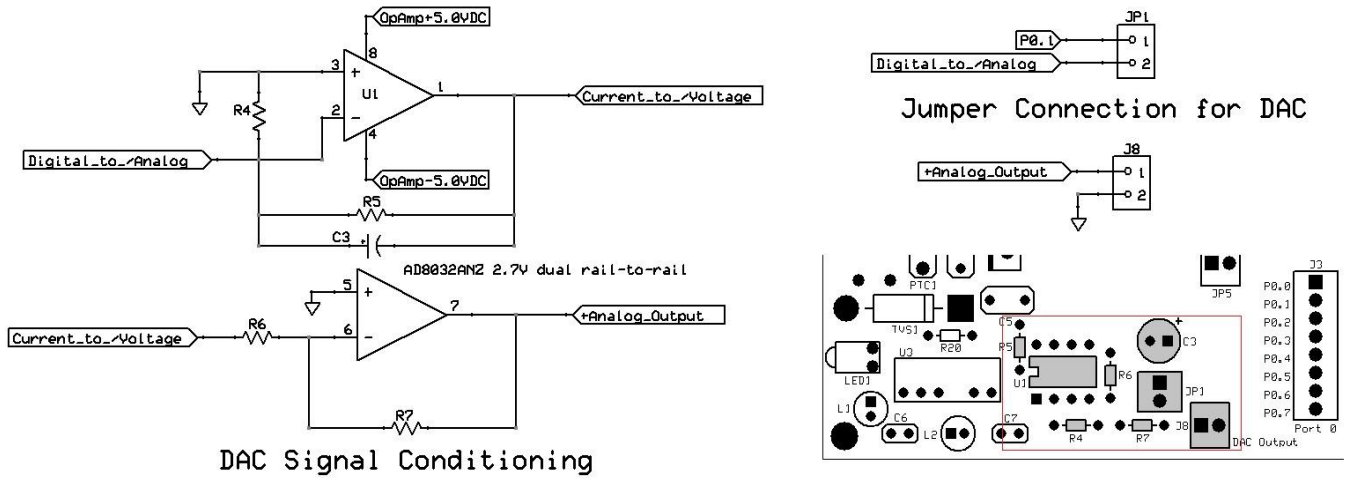

Figure 12

Microcontroller Display Module Interface:

The C51 Microcontroller Project Launcher provides a convenient ribbon cable connection to the PRESSON Microcontroller Display Circuit Module. The display module, shown in Figure 14, is a necessity for the students completing the PRESSON courseware involving analog-to-digital conversion and sensor signal conditioning. A three-digit seven-segment display multiplexing routine is included with the source code examples provided on the flash drive for the C51 Microcontroller Project Launcher. This code has been written specifically for operation of the three-digit seven segment display contained on the Microcontroller Display Module. Thus, the pin assignments for header J5, shown in Figure 13, conform to the port assignments given in the display multiplexing source code. Connection of a ten-position ribbon cable from J5 of the C51 Microcontroller Project Launcher to J1 of the Microcontroller Display Circuit Module provides power to the display circuitry and allows implementation of the three-digit seven segment display multiplexing routine.

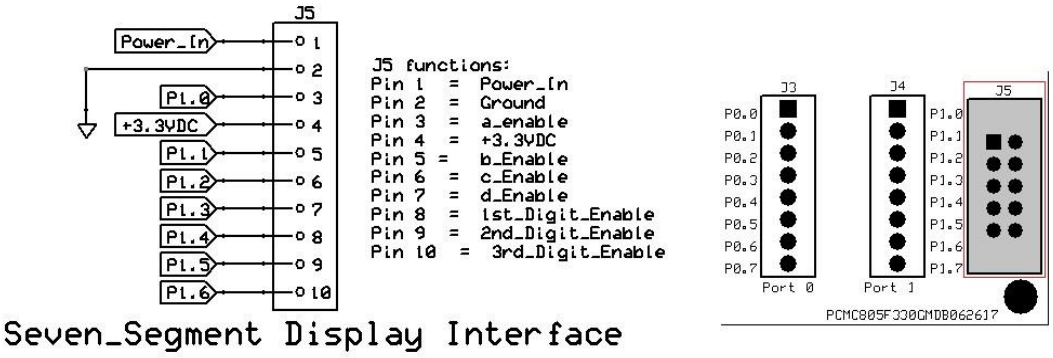

Figure 13

As shown in Figure 14, the three-digit seven segment displays are attached to the ground plane side of the PCB. The Microcontroller Display Board also contains an eight-position bitwise LED display, located on the silkscreen side of the board. The transistor drivers for these LEDs are accessed independently. As an example, to indicate the output condition of a port bit of the C8051330GM DIP-20 MCU Module, the user could make a quick jumper connection from a pin on header J3 or J4 on the C51 Microcontroller Project Launcher to one of the bitwise connection points on header J3 of the Microcontroller Display Module.

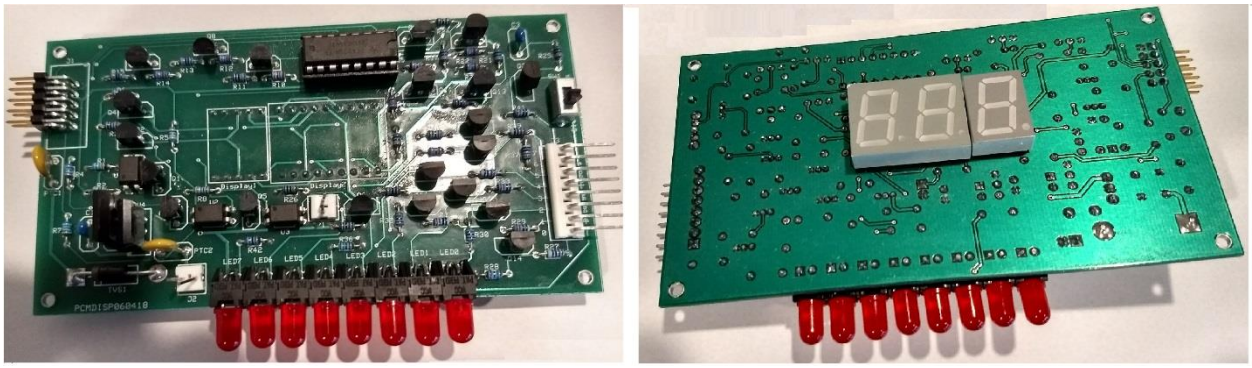

Figure 14

C2 In-System Programming Interface and Reset Circuitry:

Figure 15 shows the locations and pin-out of the in-system programming (ISP) interface and Manual Reset circuitry for the C51 Microcontroller Project Launcher. Dual row header J6 is a JTAG connector used to attach the Silicon Labs 8-Bit USB Debug Adapter (Mouser Electronics part number 634-DEBUGADPTR1USB) to the C51 Microcontroller Project Launcher. Tactile switch SW1 serves as the Manual Reset for the C51 Microcontroller Project Launcher.

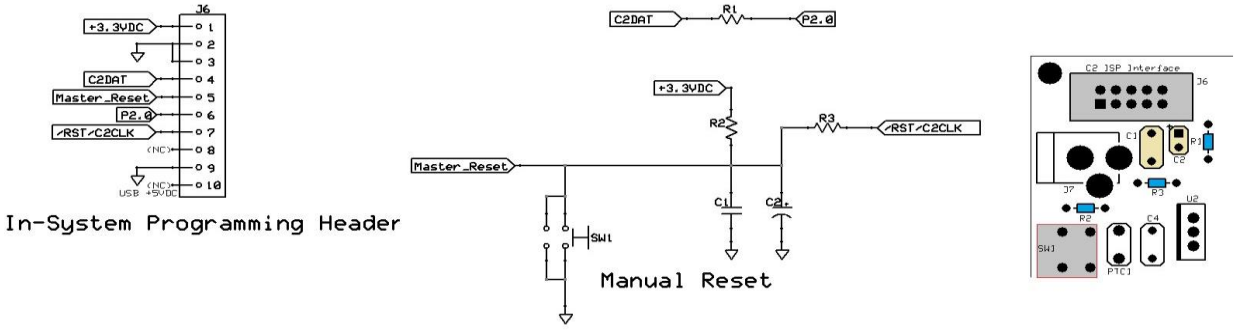

Figure 15

The ISP interface on the C51 Microcontroller Project Launcher is compatible with both the Silicon Labs 8-bit USB Debug Adapter and the older Serial Debug Adapter. The USB Debug Adapter receives +5.0VDC from the user's PC and provides that voltage at pin 10 of its JTAG output connector. (This voltage source could be necessary for operation of some development boards. However, because the C8051330GM DIP-20 MCU Circuit Module has its own internal power bussing, the pin 10 connection of J6 on the C51 Microcontroller Project Launcher is left open. The older serial version of the Silicon Labs Debug Adapter relies on its target for DC operating voltage. For this reason, the C51 Microcontroller Project Launcher provides a +3.3VDC output at pin 1 of J6. Because pin 1 of the USB adapter's output connector is open, the +3.3VDC from the C51 Microcontroller Project Launcher is isolated from that device.

Performing programming exercises for the C51 Microcontroller Project Launcher requires implementation of the Silicon Labs IDE, used in conjunction with the Silicon Labs USB Debug Adapter, which, connects between a USB port of the user's PC and J6 of the C51 Microcontroller Project Launcher. The USB Debug Adapter, available through Mouser electronics (part number 634-DEBUGADPTR1-USB), must be purchased separately. The Silicon Labs IDE, along with the most recent courseware, source code samples, and documentation for the C51 Microcontroller Project Launcher Circuit Module, is stored on the PRESSON flash drive included in the project launcher kit package. Also, the Silicon Labs IDE can be downloaded directly from the Silicon Labs website by following the steps listed in Table 2.

Table 2

Downloading Silicon labs IDE and Tools	
Step 1	Go to the Silicon Labs 8-bit Microcontroller Studio.
Step 2	Click on **Register** to create an account. (if you are a student, use the name of your school as the company name).
Step 3	Scroll down to **Individual Components** and select **Silicon Labs IDE**. Click on **Download Software**.
Step 4	Enter your e-mail and password, then begin the download.
Step 5	Return to the Silicon Labs 8-bit Microcontroller Studio page.
Step 6	Scroll down to **Individual Components** and select **Keil® PK51 Developer's Kit**. Click on **Download Software** and follow the Download Wizard.
Step 7	Restart your computer.
Step 8	Click over your PC **Start** button and select **All Programs**. Verify the presence of a Silicon Labs folder containing the Silicon Labs IDE.
Step 9	Click on **Computer** then click on OS (C:). Verify the presence of a **Keil** folder. If the folder is named **Keil_v5**, rename it Keil. (This step is necessary to provide the proper path to the Keil A51 assembler when using the Silicon Labs IDE.)
Step 10	Open the Silicon Labs IDE.

Appendix I:

System Schematic Diagrams:

C8051330GM DIP-20 MCU Circuit Module Pin Out:

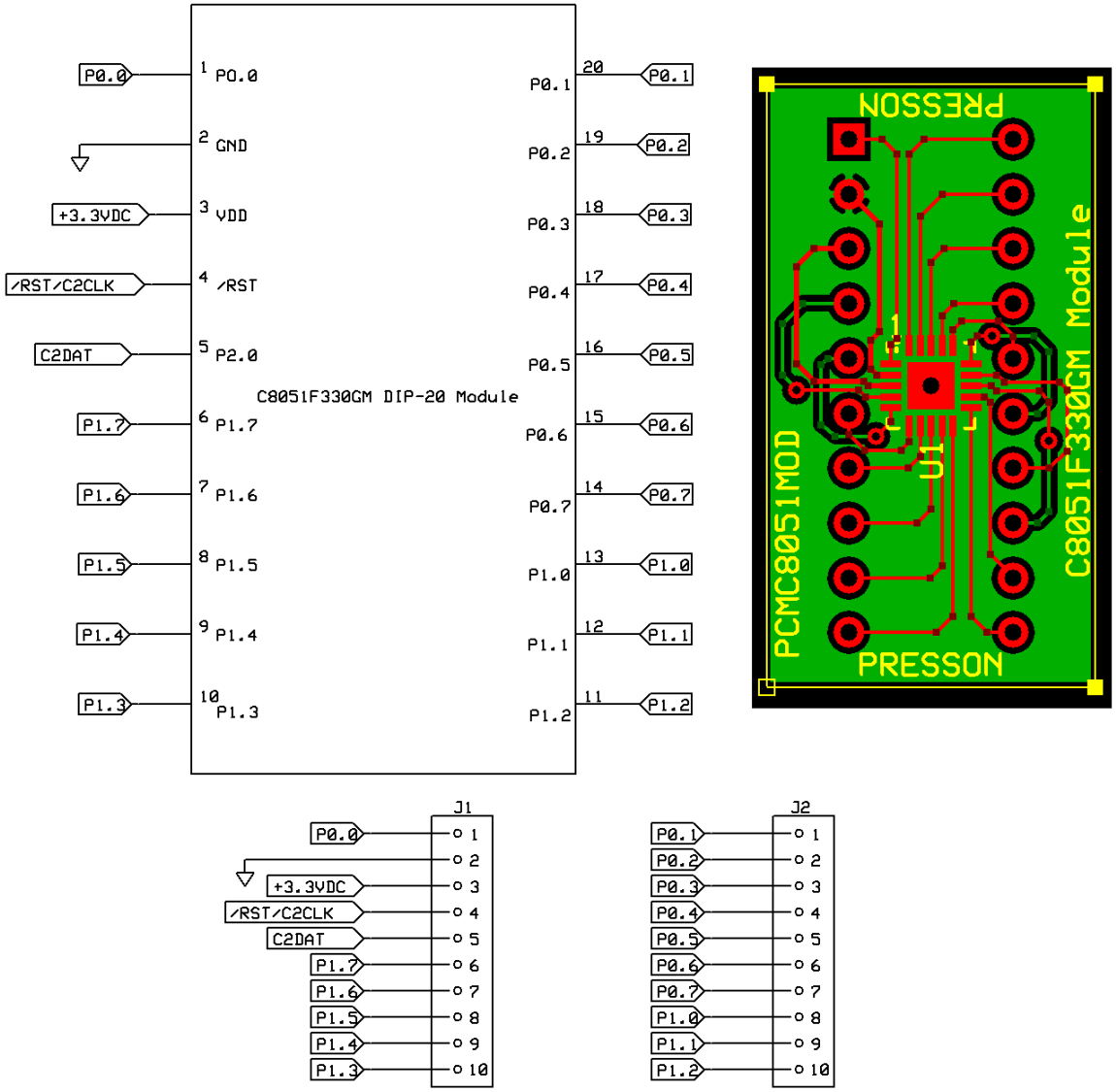

Mounting Locations for the 517-220-3342-00 20-Position ZIF Socket

Figure 16

C51 Microcontroller Project Launcher Circuit Module Schematic Diagrams:

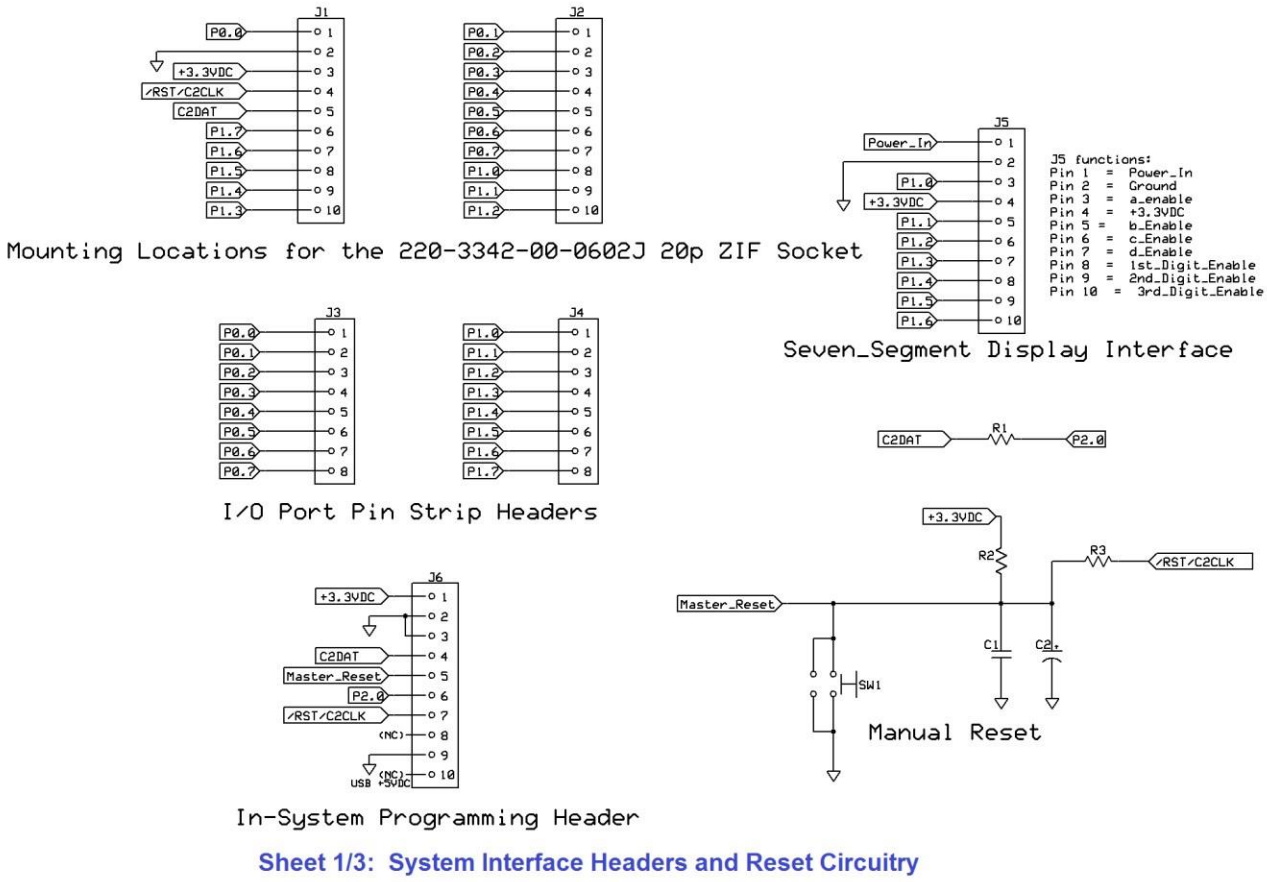

Figure 17

C51 Microcontroller Project Launcher Circuit Module Schematic Diagrams, cont:

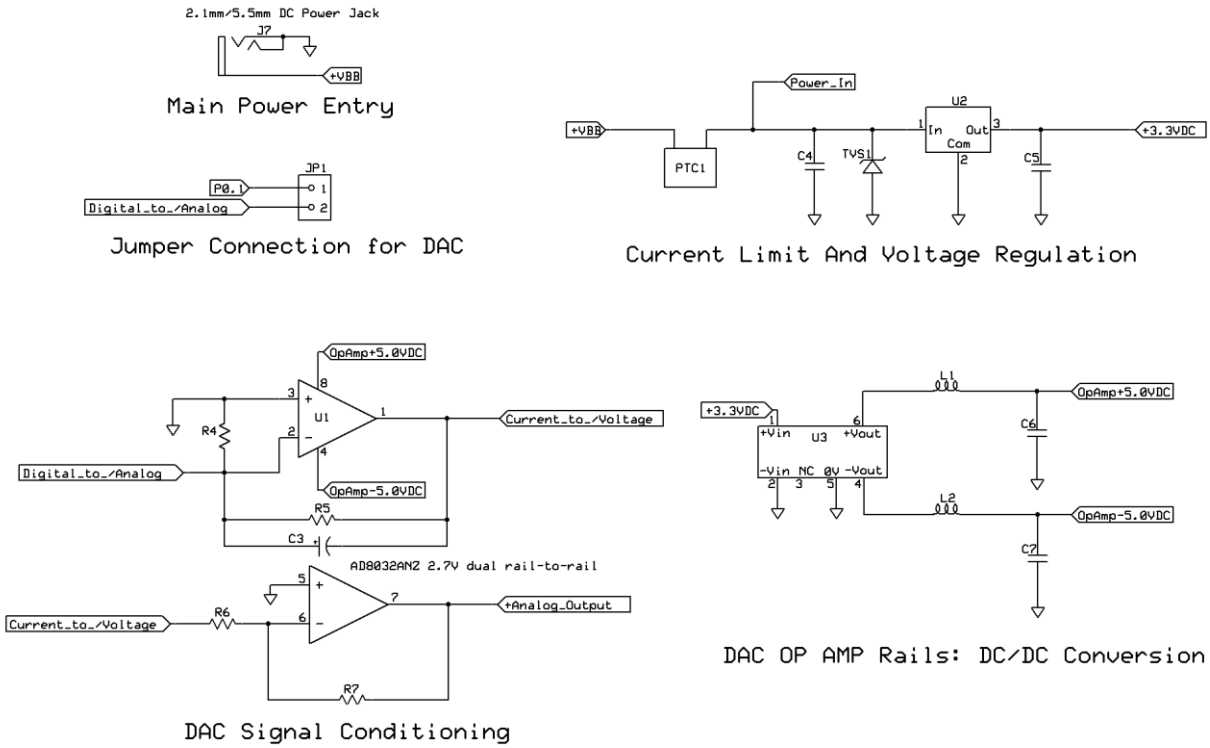

Figure 17

C51 Microcontroller Project Launcher Circuit Module Schematic Diagrams, cont:

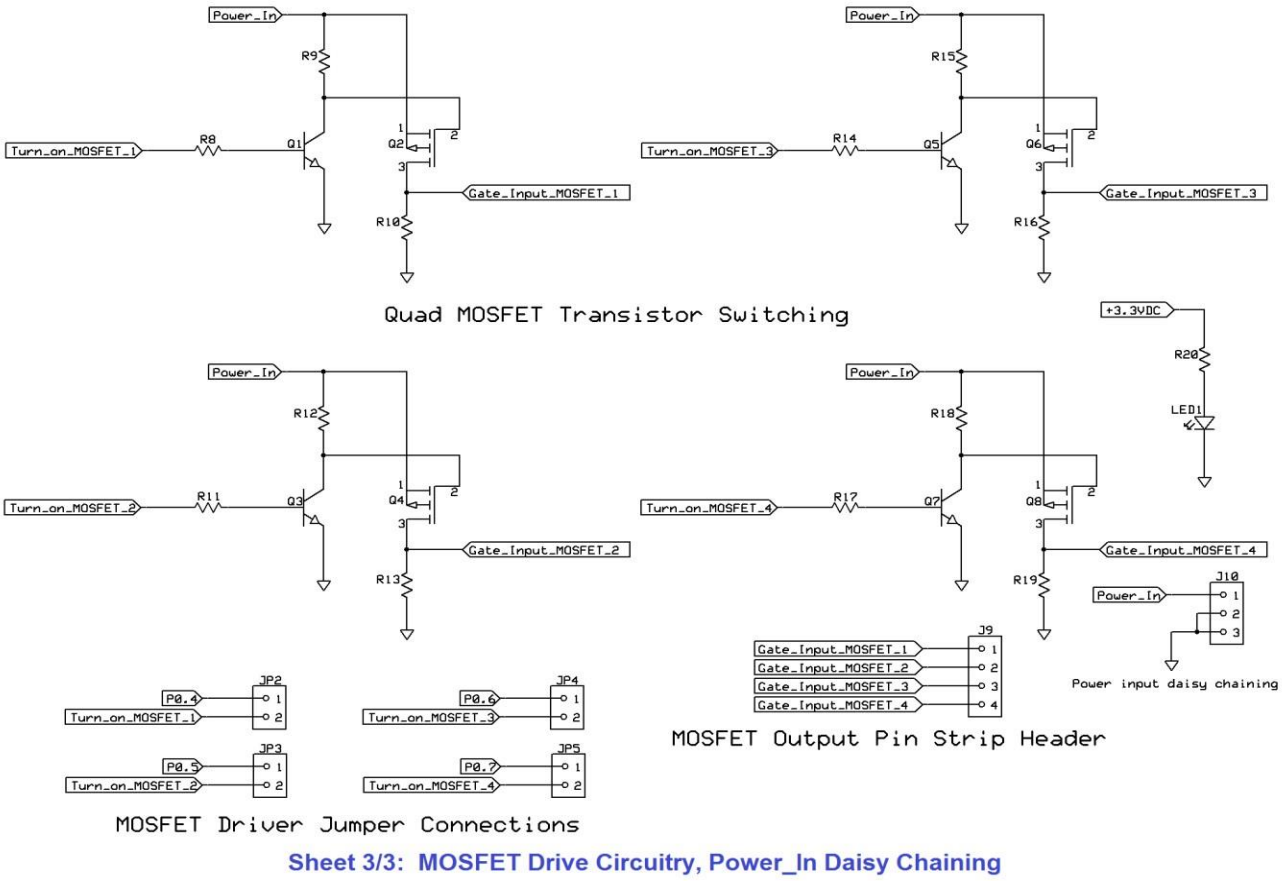

Sheet 3/3: MOSFET Drive Circuitry, Power_In Daisy Chaining

Figure 19

Appendix 2:

C51 Microcontroller Project Launcher Board Bill of Materials		
Component ID	**Component Description**	**Supplier Part Number**
C1	0.47uF 50V 20% ZFU MLCC	80-C322C474M5U
C2	1uF 35V 20% tantalum	581-TAP105M035SCS
C3a	0.33uF 50V 10% X7R MLCC	810-FA28X7R1H33400
C3b	2.2µF, 10V, X5R MLCC	810-FG28X7R1A225KRT0
C3c	47uF 10V 20% organic polymer	661-PSA10VB47M
C3_1	PCB receptacle	575-1303015154714040
C3_2	PCB receptacle	575-1303015154714040
C4	0.33uF 50V 20% Z5U MLCC	80-C322C334M5U
C5	0.47uF 50V 20% ZFU MLCC	80-C322C474M5U
C6	2.2uF 16V 10% X7R MLCC	810-FK14X7R1C225K
C7	2.2uF 16V 10% X7R MLCC	810-FK14X7R1C225K
J3	8p 0.1" pin strip header	571-6404528
J4	8p 0.1" pin strip header	571-6404528
J5	10p JTAG header	571-5-146256-5
J6	10p JTAG header	571-5-146256-5
J7	2.0mm/5.5mm DC Jack	806-KLDX-0202-A-LT
J8	2p 0.1" pin strip header	571-6404522
J9	4p 0.1" pin strip header	571-6404524
J10	3p 0.1" pin strip header	571-6404523
JP1	2p 0.1" pin strip header	571-6404522
JP2	2p 0.1" pin strip header	571-6404522
JP3	2p 0.1" pin strip header	571-6404522
JP4	2p 0.1" pin strip header	571-6404522
JP5	2p 0.1" pin strip header	571-6404522
L1	22uH 0.95ohm 10%	580-11R223C
L2	22uH 0.95ohm 10%	580-11R223C
LED1	3mm (T-1) red (700nm) 6 mcd CBI	749-H101CRD
PTC1	PTC Fuse 0.5A hold current 1 A trip current	650-RXEF050
Q1	MPSA20 npn small signal	G19467
Q2	40V P-channel enhancement RDS(on) = 8ohm	689-VP0104N3-G
Q3	MPSA20 npn small signal	G19467
Q4	40V P-channel enhancement RDS(on) = 8ohm	689-VP0104N3-G
Q5	MPSA20 npn small signal	G19467
Q6	40V P-channel enhancement RDS(on) = 8ohm	689-VP0104N3-G
Q7	MPSA20 npn small signal	G19467
Q8	40V P-channel enhancement RDS(on) = 8ohm	689-VP0104N3-G
R1	1Kohm 1/8W metal film	270-1K-RC

R2	2.2Kohm 1/8W 1% metal film	270-2.2K-RC
R3	6.8Kohm 1/8W 1% metal film	270-6.8K-RC
R4	1.5Mohm 1/8W 1% metal film	270-1.5M-RC
R5	3.3Kohm 1/8W 1% metal film	270-3.3K-RC
R6	1.5Kohm, 1/8W 1% metal film	270-1.5K-RC
R7	4.7Kohm 1/8W 1% metal film	270-4.7K-RC
R8	12Kohm 1/8W 1% metal film	270-12K-RC
R9	1Kohm 1/8W 1% metal film	270-1K-RC
R10	1Kohm 1/8W 1% metal film	270-1K-RC
R11	12Kohm 1/8W 1% metal film	270-12K-RC
R12	1Kohm 1/8W 1% metal film	270-1K-RC
R13	1Kohm 1/8W 1% metal film	270-1K-RC
R14	12Kohm 1/8W 1% metal film	270-12K-RC
R15	1Kohm 1/8W 1% metal film	270-1K-RC
R16	1Kohm 1/8W 1% metal film	270-1K-RC
R17	12Kohm 1/8W 1% metal film	270-12K-RC
R18	1Kohm 1/8W 1% metal film	270-1K-RC
R19	1Kohm 1/8W 1% metal film	270-1K-RC
R20	82ohm 1/8W 1% metal film	270-82-RC
ZIF1	20p ZIF socket for C8051F330GM Module	517-220-3342-00
DIP20_Socket	Alternative socket for C51_MPL_PCB	575-11044320
DIP1	8p DIP socket	571-2-1571552-2
SW1	NO momentary tactile	653-B3W-1002
TVS1	15V unidirectional transient suppressor	511-BZW06-28
U1	AD8032ANZ 2.7V dual rail-to-rail op amp	584-AD8032ANZ
U2	3.3VDC 500mA regulator	595-UA78M33CKCSE3
U3	3.3VDC in to +/-5.0VDC out DC/DC converter	580-NKA0305SC
C51_DIP_20	C8051330GM DIP-20 MCU Module	PCM_C8051F330GM_MOD
C51_MPL_PCB	4.0" x 2.5" two-layer FR-4 epoxy glass PCB	PCMC805F330DEV070517

NOTE: One C8051330GM DIP-20 MCU Module is included with the C51 Microcontroller Project Launcher Circuit Module. Extra pieces of the C8051330GM DIP-20 MCU Module can be purchased directly from PRESSON Circuit Modules, Inc.